MX	MEXICO

Diagram / Parts List

VR003G

CORDLESS CONCRETE VIBRATOR

2022/01

(MX) VR003G / CORDLESS CONCRETE VIBRATOR

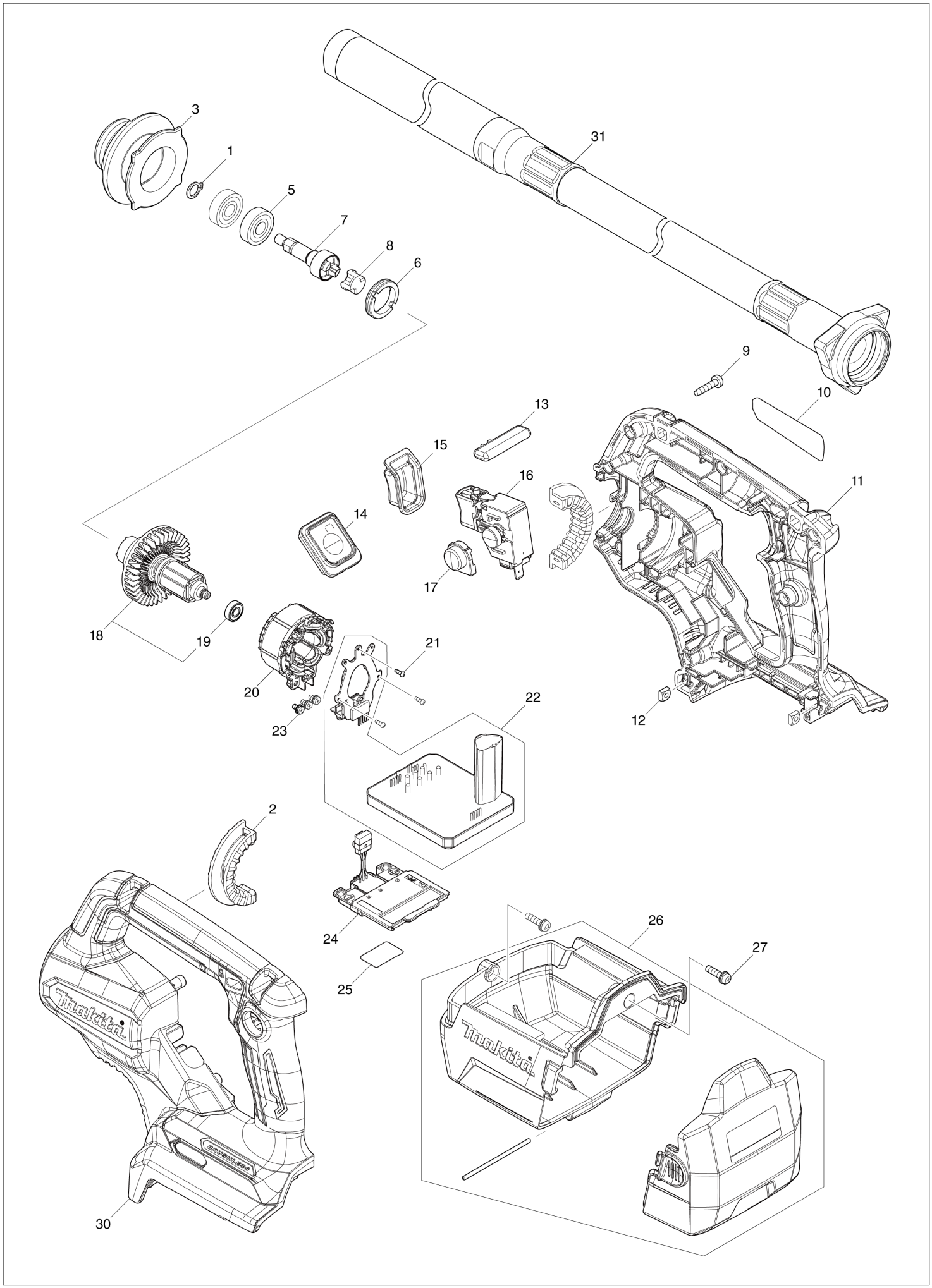

MX	MEXICO

VR003G / CORDLESS CONCRETE VIBRATOR

Item	Sub	Parts No.	Parts Description	Qty	I/C	E/C No.	Close No.	Remark
001		961005-4	RETAINING RING S-9	1				
002		422910-5	RUBBER RING	2				
003		313434-1	HOSE HOLDER	1				
005		210051-7	BALL BEARING 609LLB	2				
006		285053-2	BEARING RETAINER 19-26	1				
007		141K76-5	SPINDLE COMPLETE	1				
008		424833-3	SPACER	1				
009		266045-0	TAPPING SCREW 4X20	11				
010		858L62-2	VR003G NAME PLATE	1				
011		183V84-6	HOUSING SET	1				
	C10	8005T5-8	XGT LOGO LABEL	1				
	C20	263005-3	RUBBER PIN 6	2				
	D10		INC. 30					
012		252173-7	SQUARE NUT	2				
013		458822-6	LOCK LEVER	1				
014		141K86-2	SWITCH CIRCUIT COMPLETE	1				
	C10	8055V0-7	SWITCH LABEL	1				
015		422966-8	SWITCH COVER	1				
016		651493-0	SWITCH C3JW-4CM-1L	1				
017		458819-5	LOCK ON BUTTON COVER	1				
018		136692-0	ROTOR ASS'Y	1				
	D10		INC. 19					
019		210039-7	BALL BEARING 695DDW	1				
020		629B21-1	STATOR	1				
021		266490-9	TAPPING SCREW PT 2X6	3				
022		620H53-7	CONTROLLER	1				
023		652069-6	FLAT HEAD SCREW M3X6	3				
024		632P65-6	TERMINAL UNIT	1				
025		858L67-2	VR003G SERIAL NO. LABEL	1				
026		136704-9	BATTERY CASE S ASS'Y	1				
	C10	816B52-1	CAUTION LABEL	1				
	C20	810196-7	CAUTION LABEL	1				
027		911128-8	P.H.SCREW M4X16 WITH WR	2				
030		183V84-6	HOUSING SET	1				
	C10	8005T5-8	XGT LOGO LABEL	1				
	C20	263005-3	RUBBER PIN 6	2				
	D10		INC. 11					
031		1910E1-5	FLEXIBLE SHAFT 32-1.2 SET	1				
	C10	HA00000307	SHAFT (1.0M)	1				
A01		781213-9	WRENCH 8	1				
A02B		412393-7	BATTERY COVER	1				
A03B		***DC40RA	DC40RA FAST CHARGER	1				
	D10		COMPO-PARTS					
A04B		191B26-6	BATTERY BL4040 SET	1				

B:

Interchange
O : Yes
X : No
< : the new part can be substituted for the current.
> : the current part can be substituted for the new.
S : Interchangeable as a set.